ЗАО "Берг АБ" (495) 727-22-72 promshop- biz@ya.ru www.promshop.biz

SKF TKTL 30

Instructions for use
Mode d'emploi
Bedienungsanleitung
Instrucciones de uso
Manuale d'instruzioni
Bruksanvisning
Gebruiksaanwijzing
Instrucções de utilização
Brugervejledning
Käyttöohje
Οδηγίες χρήσης
取扱説明書

EC DECLARATION OF CONFORMITY

We, SKF Maintenance Products, Kelvinbaan 16, 3439 MT Nieuwegein, The Netherlands, declare that the

SKF Infrared Thermometer
TKTL 30

is been designed and manufactured in accordance with European Directive EMC 2004/108/EC as outlined in the standards

EN 61326-1:2006 CISPR 11:2003, class B IEC 61000-4-2:2008
EN 61326-2-2:2006 IEC 61000-4-3:2008

The laser complies with 21CFR, Ch 1-J

The Netherlands, January 2011

Sébastien David
Manager Product Development and Quality

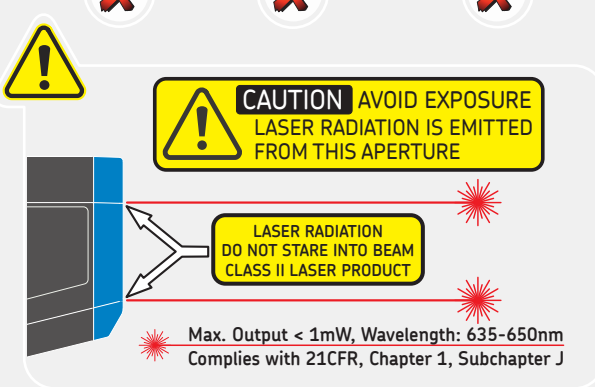

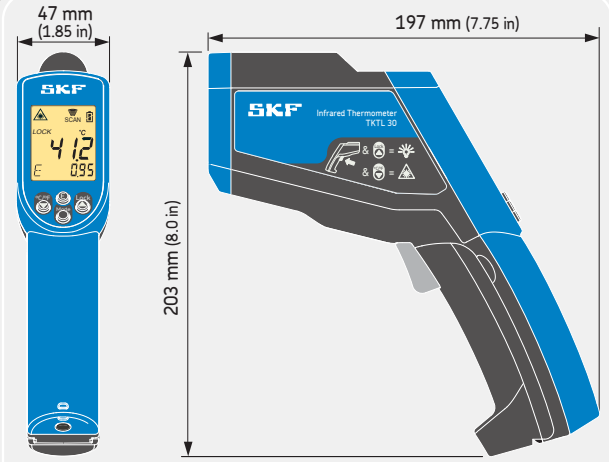

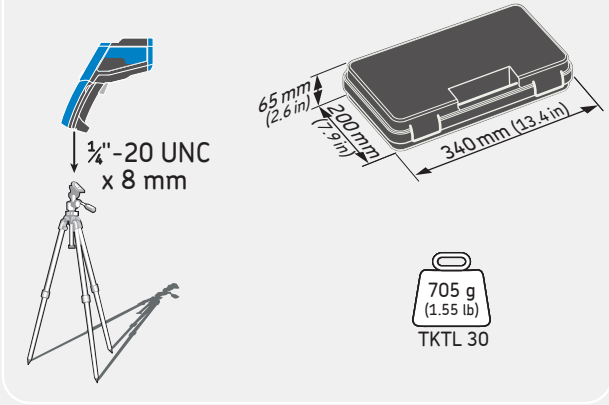

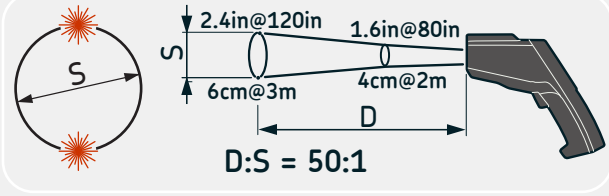

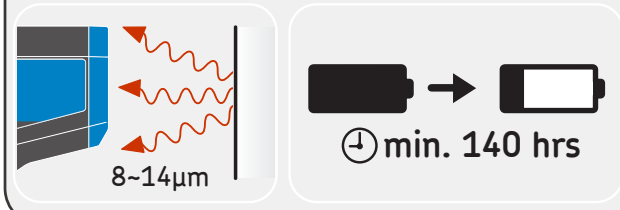

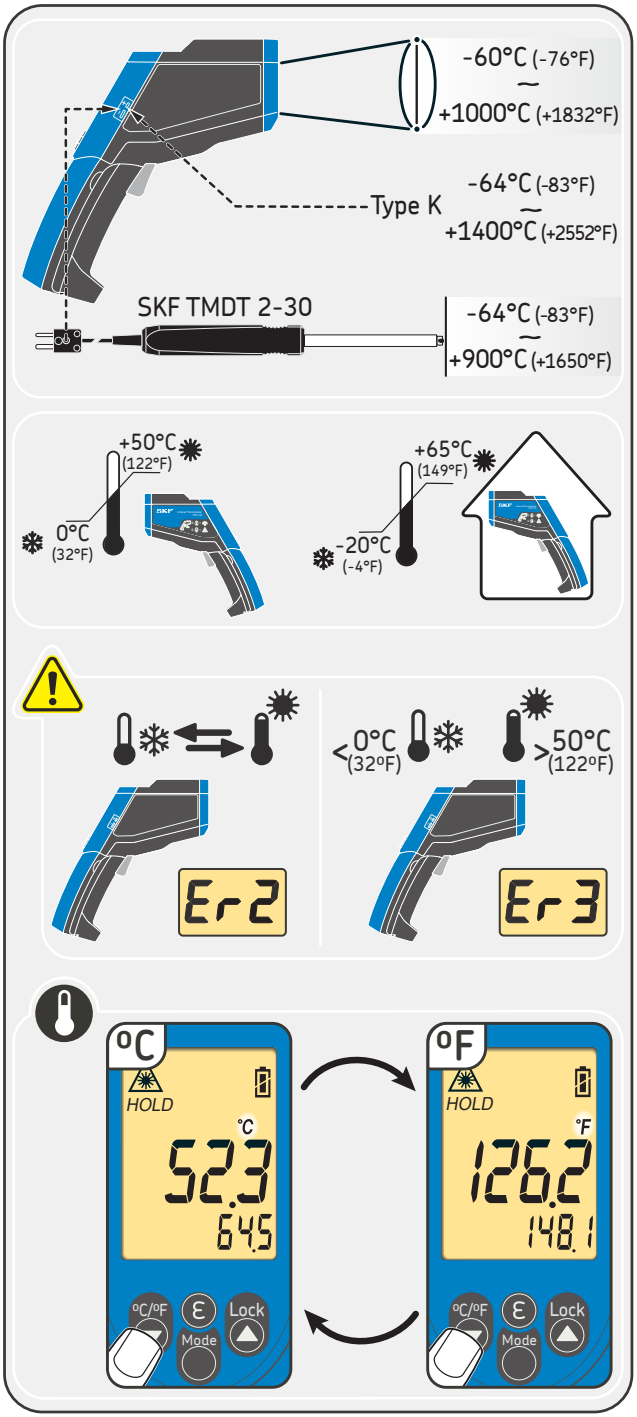
-60°C (-76°F)
~
+1000°C (+1832°F)
Type K
-64°C (-83°F)
~
+1400°C (+2552°F)
SKF TMDT 2-30
-64°C (-83°F)
~
+900°C (+1650°F)
+50°C (122°F)
0°C (32°F)
+65°C (149°F)
-20°C (-4°F)
Er2
Er3
°C
°F
HOLD
523
645
1262
1481
°C/°F
Mode
Lock

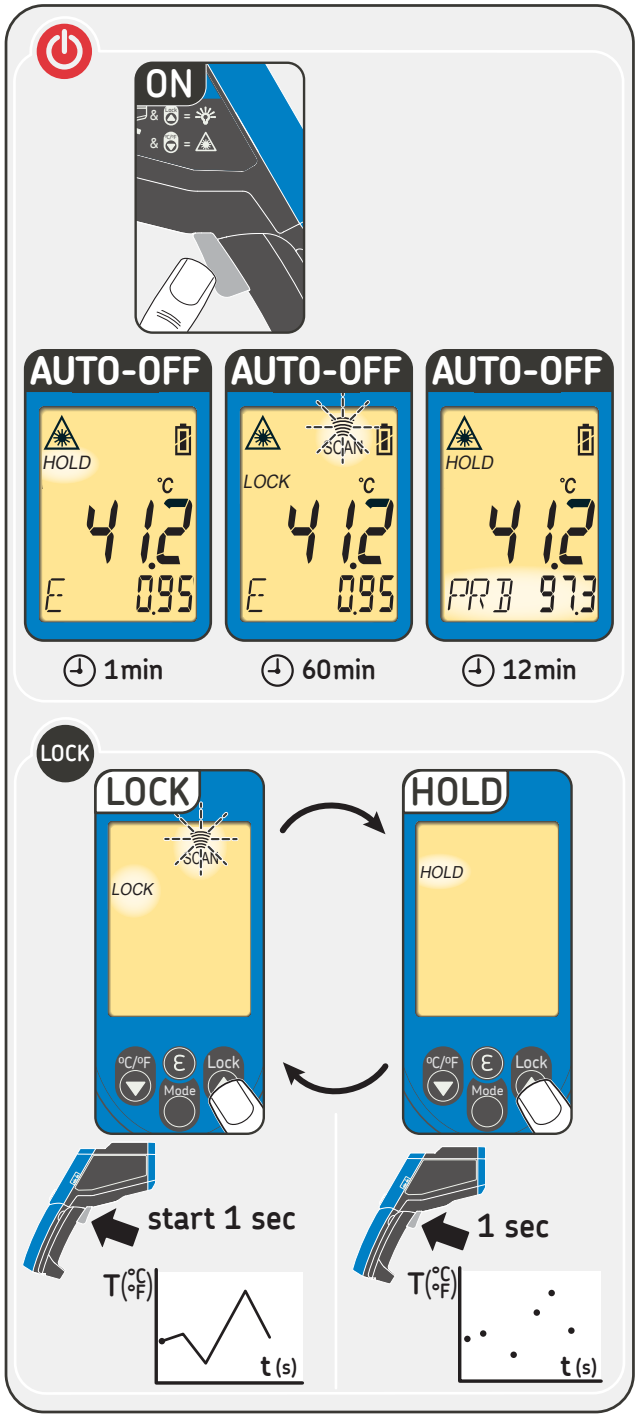
ON
AUTO-OFF
AUTO-OFF
AUTO-OFF
HOLD
LOCK
SCAN
412
0.95
PRB 97.3
1min
60min
12min
LOCK
HOLD
°C/°F
Mode
Lock
start 1 sec
1 sec
T(°C/°F)
t (s)

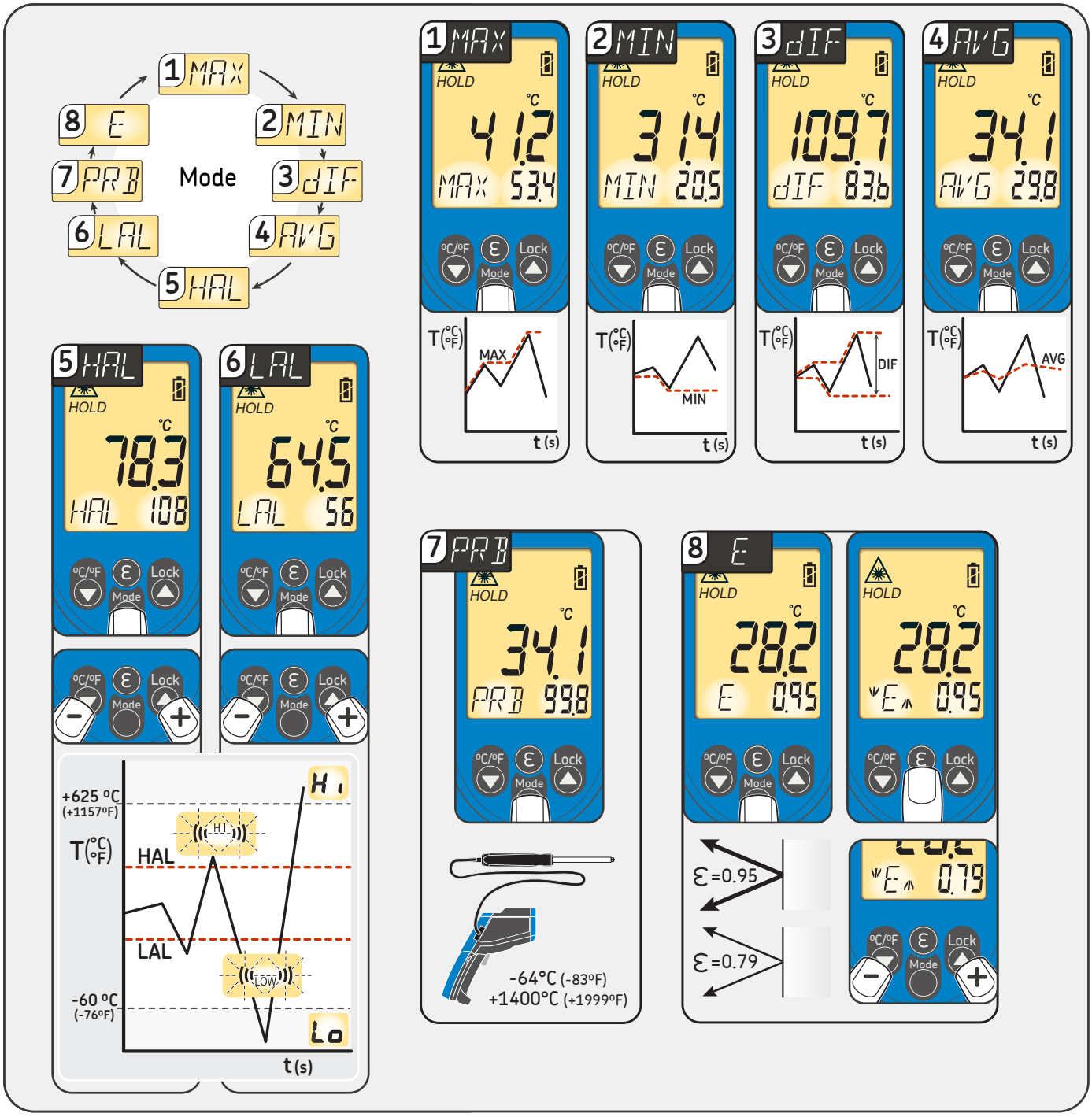
1 MAX
2 MIN
3 dIF
4 AVG
5 HAL
6 LAL
7 PRB
8 E
Mode
HOLD
°C/°F
Lock
MAX
MIN
dIF
AVG
HAL
LAL
PRB
T(°C/°F)
t (s)
+625 °C (+1157°F)
-60 °C (-76°F)
HI
LOW
Hi
Lo
-64°C (-83°F)
+1400°C (+1999°F)
ε=0.95
ε=0.79

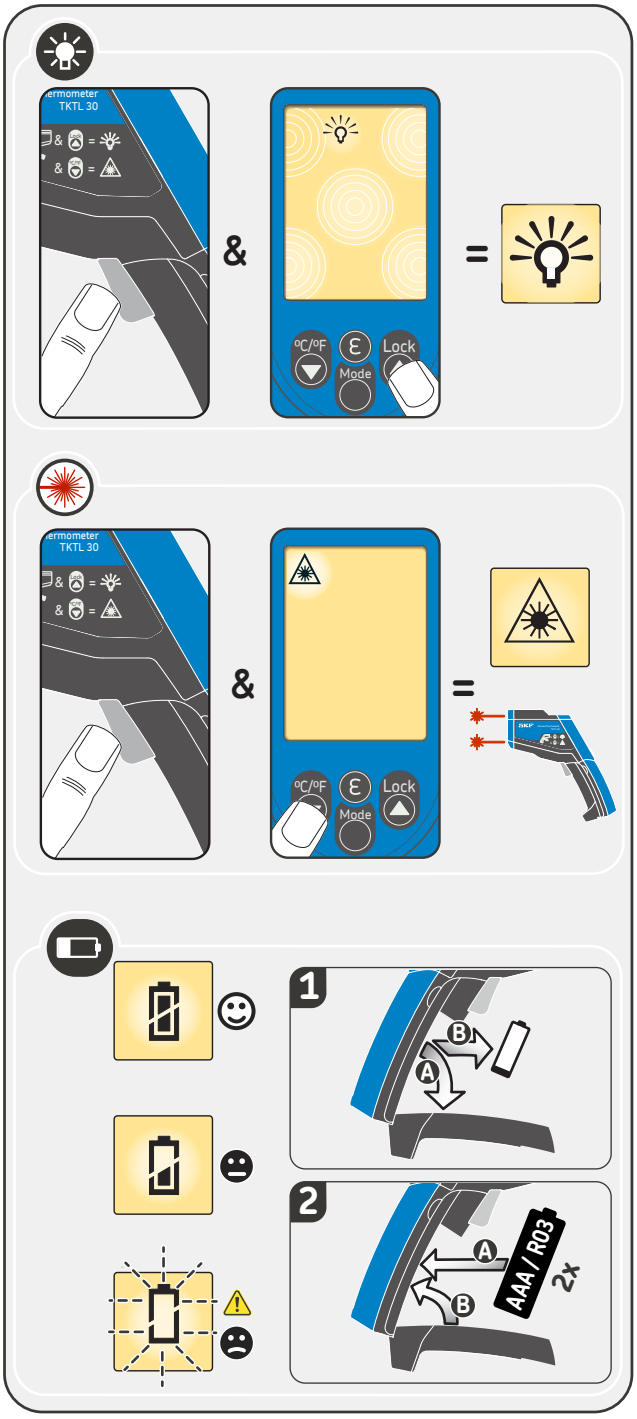
TKTL 30
&
=
°C/°F
Mode
Lock
1
2
AAA / R03
2x

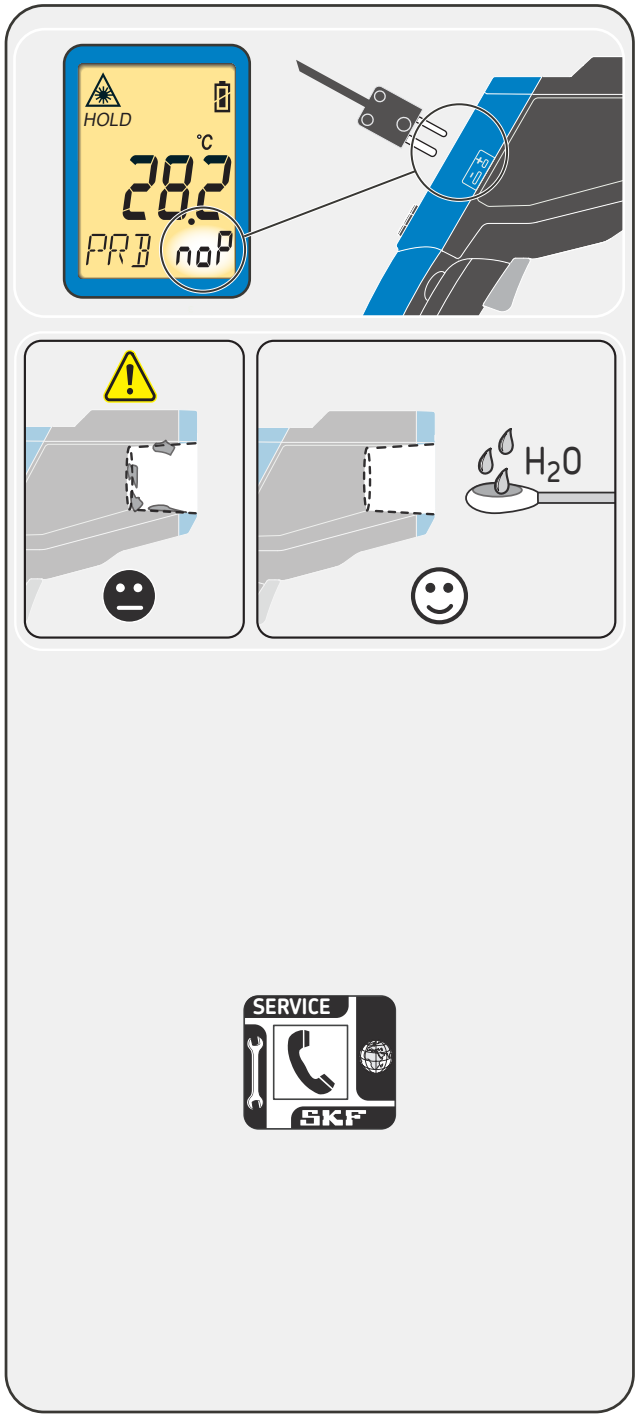
HOLD
°C
28.2
PRB
noP
H2O
SERVICE
SKF

ЗАО "Берг АБ" (495) 727-22-72 promshop- biz@ya.ru www.promshop.biz

English

In line with our policy of continuous development of our products we reserve the right to alter any part of the above specification without prior notice. Although care has been taken to ensure the accuracy of this publication, SKF does not assume any liability for errors or omissions.

中文

I 为与我们的产品持续开发政策保持一致，我们保留更改本说明书中所有产品技术参数的权利，而无需提前通知。尽管我们已尽可能地确保本说明书的准确性，我们还是不能完全避免疏忽和遗漏。若本说明书中的内容有任何歧义或异义，请参阅英文说明书

Dansk

I overensstemmelse med vor politik for kontinuerlig udvikling af vore produkter forbeholder vi os ret til at ændre på hvilken som helst af de i brochuren nævnte specifikationer, uden at meddel e dette i forvejen. Desuden tages der forbehold for eventuelle trykfejl.

Deutsch

Gemäß unserer Firmenpolitik der ständigen Weiterentwicklung unserer Produkte behalten wir uns Änderungen der obigen Daten ohne Vorankündigung vor.

Español

En línea con nuestra política de constante desarrollo de nuestros productos, nos reservamos el derecho a modificar cualquier parte de las especificaciones sin previa notificación.

Français

Conformément à notre politique de développement continu de nos produits, nous nous réservons le droit de modifier, sans préavis, tout ou partie des spécifications ci-dessus.

Italiano

In linea con la nostra politic a di sviluppo continuo dei prodotti ci riserviamo il diritto di apportare modifiche senza preavviso a qualsiasi parte della presente documentazione.

Nederlands

In verband met onze politiek van continue ontwikkeling van onze produkten, behouden wij ons het recht voor om de specificaties van de vermelde onderdelen te wijzigen zonder nota vooraf.

Português

Em linha com a nossa política de desenvolvimento contínuo dos nossos produtos, reservamo-nos o direito de alterar este catálogo sem aviso prévio.

Suomi

Tavoitteenamme on tuotteidemme jatkuva kehittely. Pidätämme siksi oikeuden etukäteen ilmoittamatta muuttaa yllä olevia erittelyjä.

Svenska

I linje med vår policy för kontinuerlig utveckling av våra produkter förbehåller vi oss rätten att ändra ovanstående specifikationer utan att meddela i förväg.

Ελληνικα

Σύμφωνα με την πολιτική της συνεχούς ανάπτυξης των προϊόντων μας, διατηρούμε το δικαίωμα να αλλάξουμε οποιοδήποτε μέρος των παραπάνω χαρακτηριστικών χωρίς προειδοποίηση.

SKF Maintenance Products

© *SKF 2011/08*

www.mapro.skf.com
www.skf.com/mount

MP5382

® SKF is a registered trademark of the SKF Group.